Horn Loudspeaker

LH2-UC15E

BOSCH

en Installation note

1 Installation

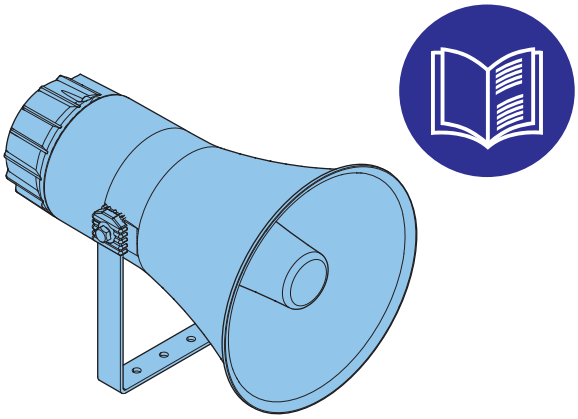

Fig. 1

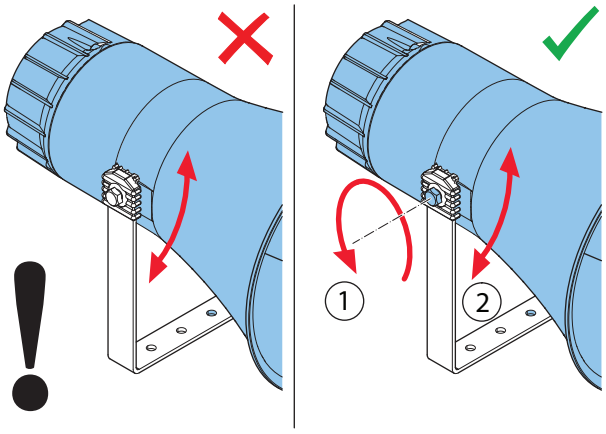

Fig. 2

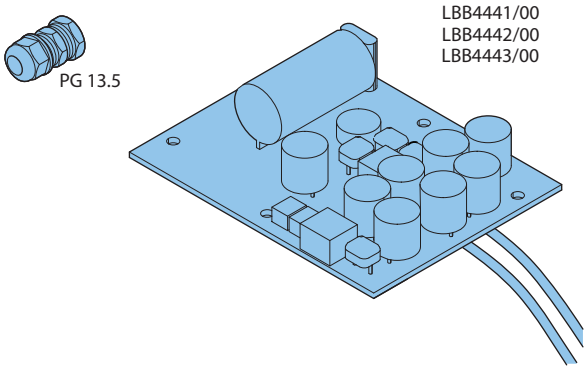

Fig. 3

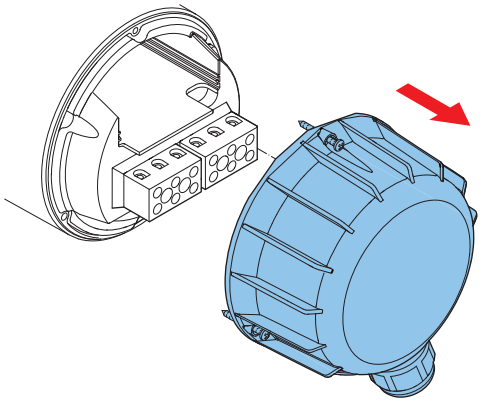

Fig. 4

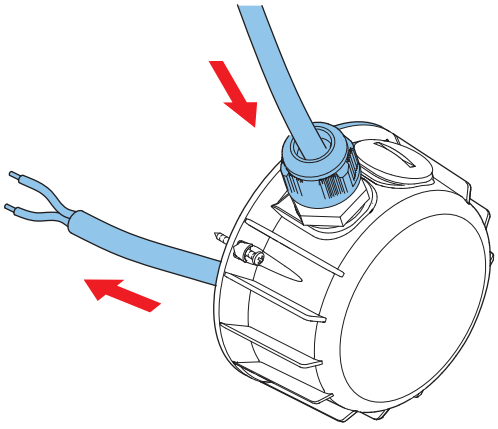

Fig. 5

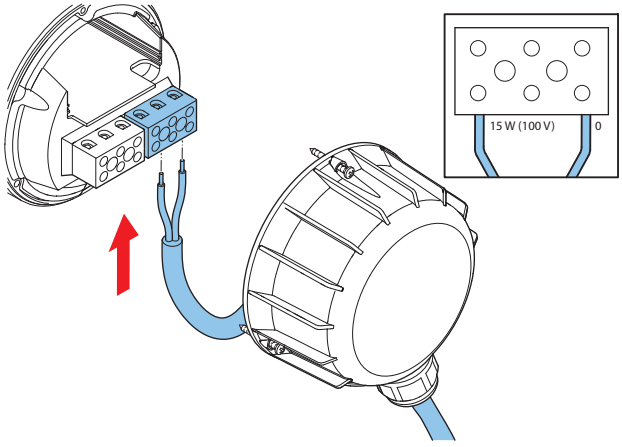

Fig. 6

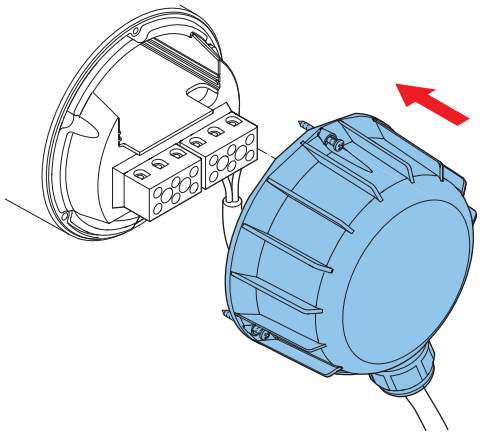

Fig. 7

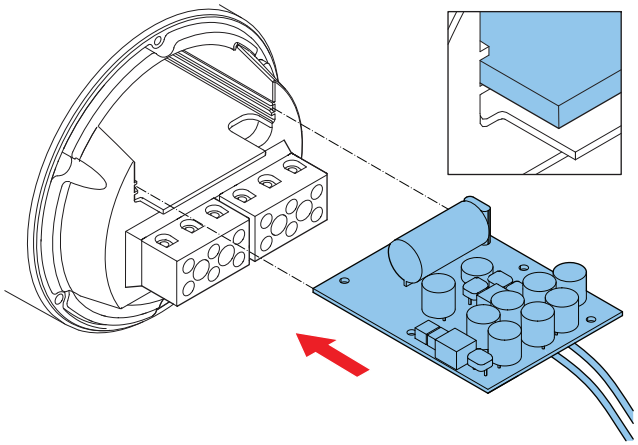

Fig. 8

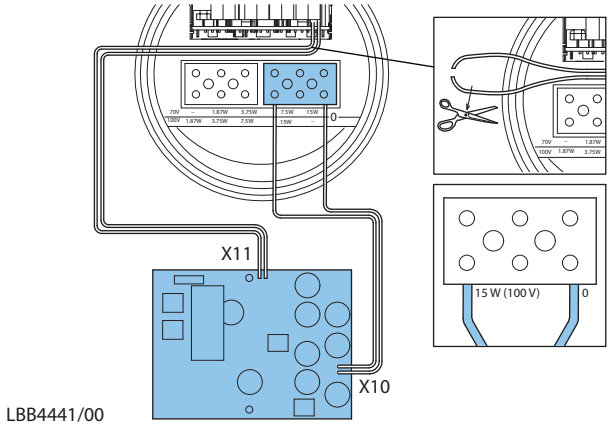

Fig. 9

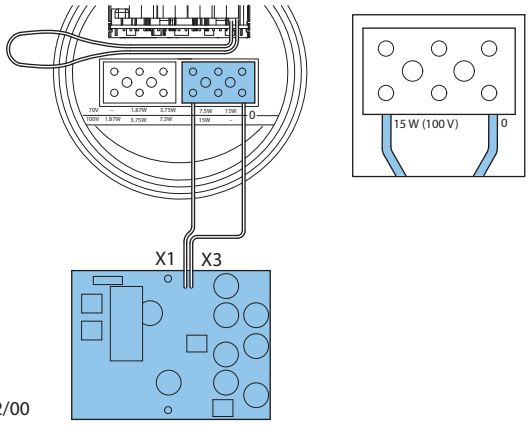

Fig. 10

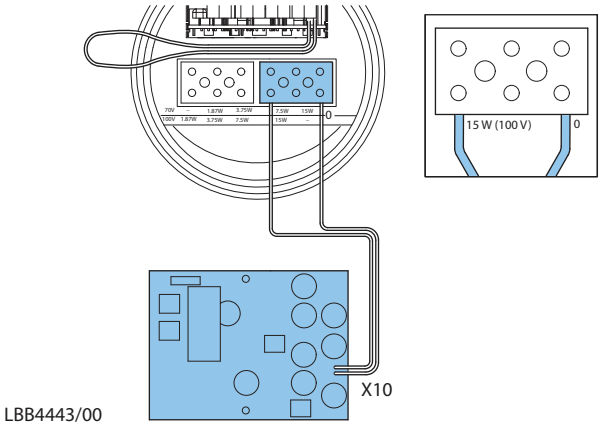

Fig. 11

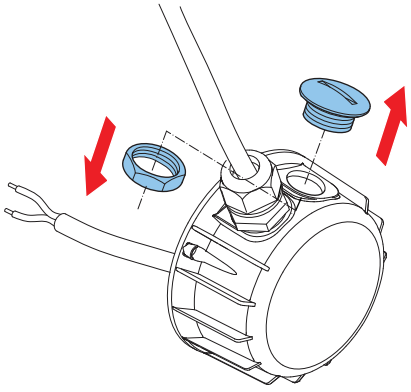

Fig. 12

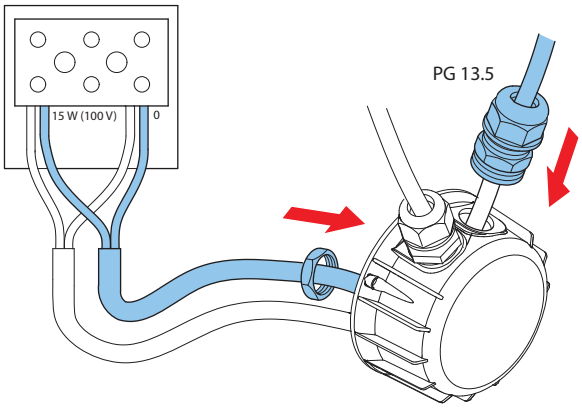

Fig. 13

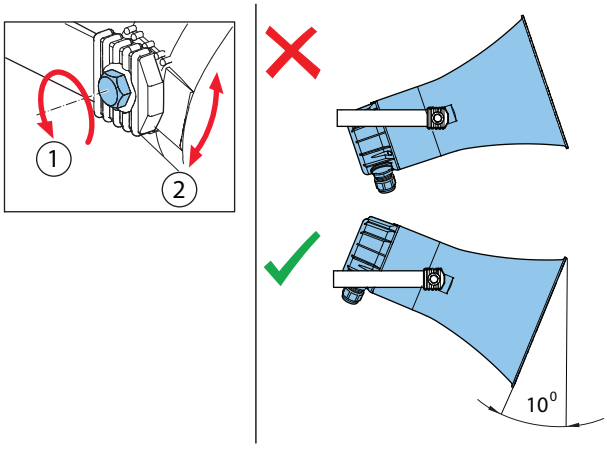

Fig. 14

2 Technical data

Electrical*

Maximum power	22.5 W
Rated power (PHC)	15 W
Power tapping	15 / 7.5 / 3.75 / 1.87 W
Sound pressure level at rated power / 1 W (1 kHz, 1 m)	120 / 108 dB (SPL)
Sound pressure level at rated power / 1 W (1 kHz, 4 m) (reference axis 0 degrees, free field)	102 / 90 dB
Effective frequency range (- 10 dB)	300 Hz to 9 kHz
Opening angle at 1 kHz / 4 kHz (-6 dB)	119° / 38°
Rated input voltage	70 / 100 V
Rated impedance	334 ohm (15 W at 70 V) 667 ohm (7,5 W at 70 V / 15 W at 100 V) 1333 ohm (3,75 W at 70 V / 7,5 W at 100 V) 2667 ohm (1,87 W at 70 V / 3,75 W at 100 V) 5347 ohm (1,87 W at 100 V)
Electrical connection	6-pole screw terminal
Acceptable wire gauge	1.0 – 2.3 mm

* Technical performance data acc. to IEC 60268-5

Mechanical

Dimensions (L x D max)	302 x 212 mm (11.89 x 8.35 in)
Weight	2.25 kg (4.96 lb)
Color	Light grey (RAL 7035)
Material horn	Glass Reinforced Polyester (GRP)
Material mounting bracket	Stainless steel (grade 316)
Cable diameter	6 mm to 12 mm (0.24 in to 0.47 in)

Environmental

Operating temperature	-55 ºC to +70 ºC (-67 ºF to +158 ºF)
Storage temperature	-40 ºC to +70 ºC (-40 ºF to +158 ºF)
Relative humidity	<95%

2.1 Certification and approvals

Safety	According to EN 60065
Emergency	According to EN 54-24 / compliant to BS 5839-8
Type approval certified	According to EN 60945
Water and dust protection	According to EN 60529, IP 67
Salt mist	According to IEC 60068-2-11
Chlorine resistant	According to IEC 60068-2-60
Wind force	According to Bft 11

2.2 Additional technical data

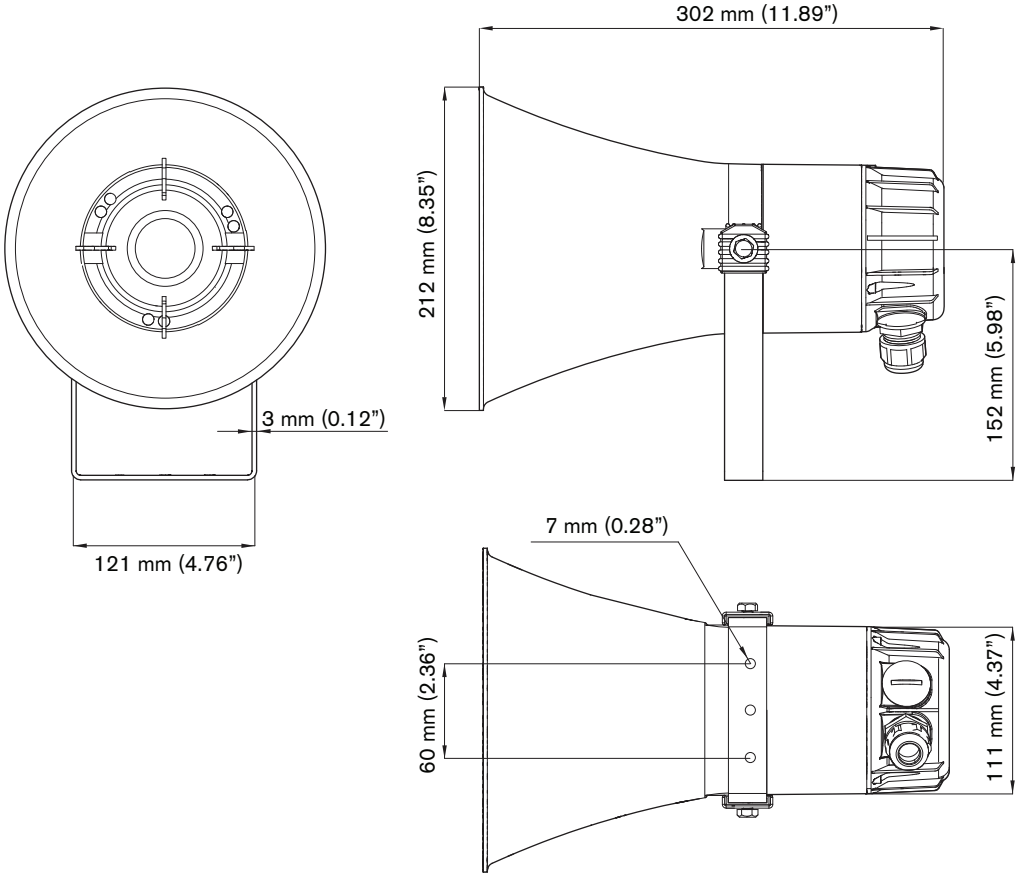

Dimensions in mm (inch)

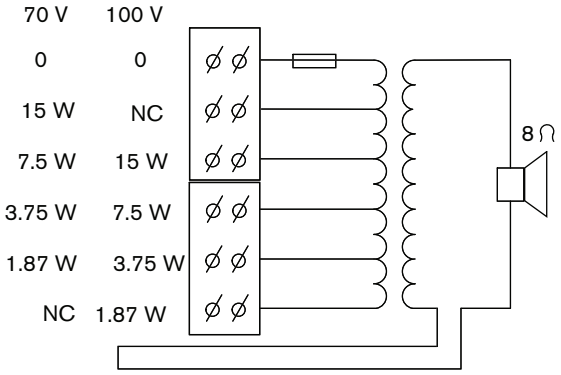

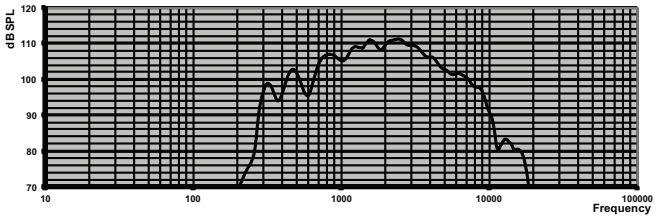

Circuit diagram

Frequency response

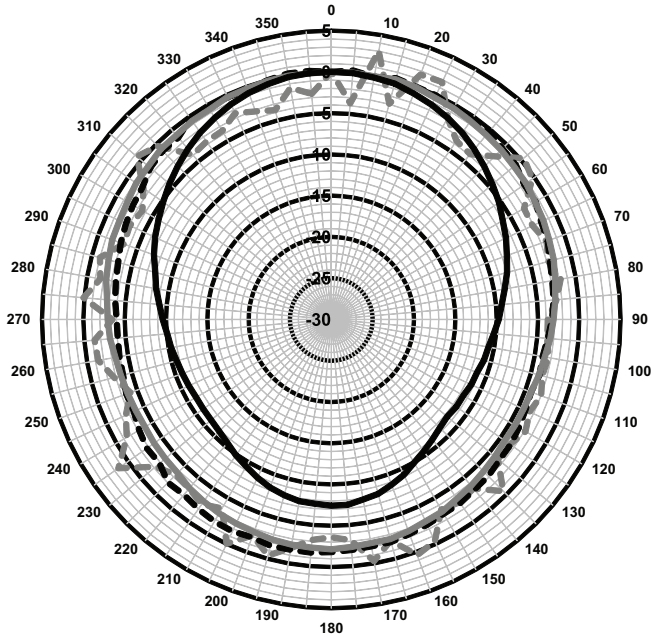

Polar diagram (Measured with pink noise)

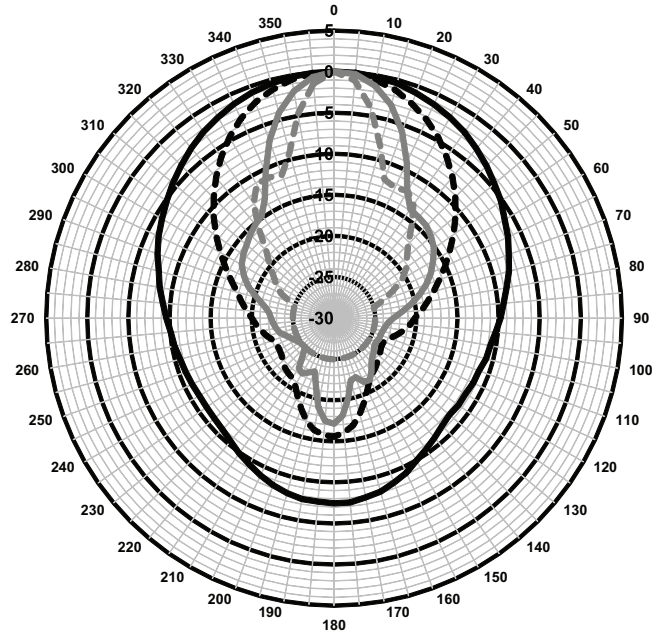

Polar diagram (Measured with pink noise)

To meet EN54-24 requirements, below stated 1/3 octave band equalization is required:

1/3 octave band (Hz)	EQ setting
1250 Hz	-2 dB
1600 Hz	-3 dB
2000 Hz	-1 dB
6300 Hz	+3 dB

CE 0560
Bosch Security Systems BV Torenallee 49, 5617BA Eindhoven, The Netherlands 0560-CPR-142190008
EN 54-24:2008 Loudspeaker for voice alarm systems for fire detection and fire alarm systems for buildings Horn Loudspeaker 15W LH2-UC15E Type B

Bosch Security Systems B.V.
Torenallee 49
5617 BA Eindhoven
The Netherlands
www.boschsecurity.com
© Bosch Security Systems B.V., 2015